Guided Soundfield™ Systems … Paradigm® fidelity, directed right where you want it!

Paradigm's unique proprietary Guided Soundfield™ systems allow you to "guide" a wide arc of sound toward a specific area of the room, much the same way we "guide" a floodlight to fill an area with light. Drivers sit at a fixed 30° angle from the ceiling, allowing you to adjust the direction of sound without compromising the dispersion pattern between drivers, or the interaction between drivers and baffle, thereby preserving the system's sonic integrity.

The Guided Soundfield™ Speakers are also ideal for use as surround and/or rear speakers. Guiding the sound towards the sides or rear of the room creates an enveloping, reverberant soundfield similar to that provided by Paradigm® ADP™ speakers. Paradigm's Guided Soundfield systems are optimized for use in areas with 8′ to 9′ (2.4 m to 2.74 m) high ceilings.

Top view of rooms

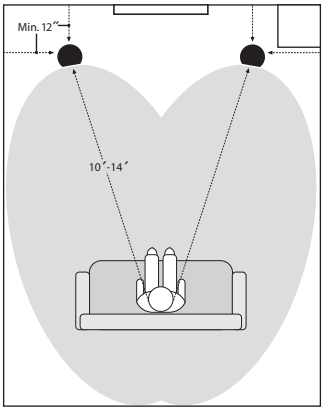

Front Left and Right Speakers

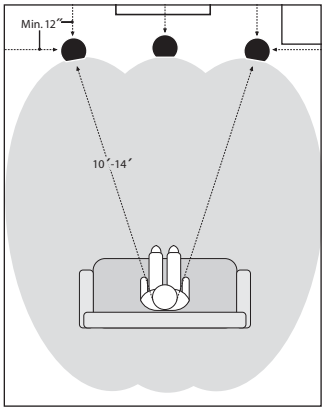

Front Left, Center, Right Speakers

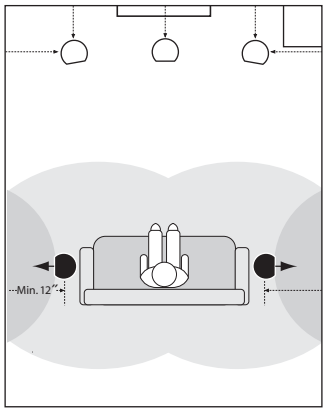

5.1 Surround Placement, diffuse soundfield

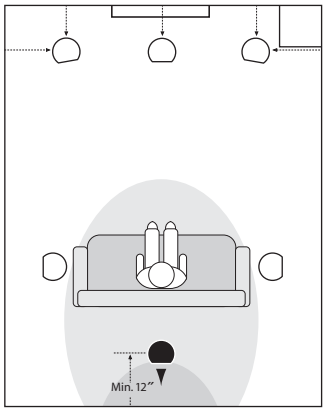

6.1 Rear Placement, diffuse soundfield

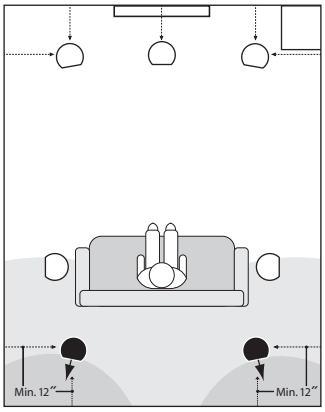

7.1 Rear Placement, diffuse soundfield

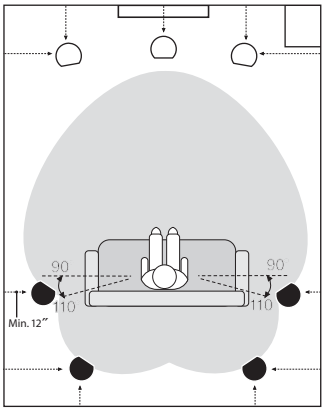

7.1 Surround/Rear, Direct Radiating

*Drawings not to scale

Guided Soundfield™ Systems are currently available on selected models in:

Paradigm® CS and AMS In-Wall/In-Ceiling Series • Paradigm® Reference SA In-Wall/In-Ceiling Series

Paradigm®

PARADIGM® REFERENCE

www.paradigm.com

Paradigm® is a registered trademark of Paradigm Electronics Inc. Copyright © Paradigm Electronics Inc. We reserve the right to change specifications and/or features without notice as design improvements are incorporated